AZT-U8-OMFR4-0603

NXP® UCODE® 8 UHF RFID Miniature On-Metal Tag

UHF On-Metal | ISO/IEC 18000-6C | EPC Global Gen2V2 | 6 x 3 mm



Key Features

Operating Frequency
UHF 865-868 MHz(EU)/902-928 MHz(US)

Chip Type
NXP® UCODE® 8

International Standard
ISO/IEC 18000-6C, EPC Global Gen2v2

EPC Memory
Up to 128 bits

TID Memory
96 bits

Certificate
REACH, RoHS, and CE compliant

1. Product Overview

The NXP® UCODE® 8 UHF RFID Miniature On-Metal Tag is designed for reliable identification and tracking of metal assets in applications where installation space is limited. Built on a durable FR4 PCB substrate, this ultra-compact tag measures just 6×3 mm, with a total thickness of 4 mm at the IC bump. Its specialized on-metal design enables RFID operation when mounted on metal surfaces, making it suitable for tagging small metal components, tools, electronic equipment, and industrial assets where compact dimensions and reliable identification are essential.

2. Product Parameters

2.1 Physical Characteristics

SKU	AZT-U8-OMFR4-0603	AZT-U8-OMFR43M-0603
Material	FR4(PCB)	FR4 PCB with 3M™ 300LSE Adhesive
Dimension	6×3 mm	
Thickness	4 mm with IC bump	
Color	Black(Red, Blue, Green, White)	
Weight	0.5 g	
Mounting Method	Adhesive	
IP Rating	IP68	
Certificate	REACH, RoHS, and CE compliant	

2.2 Technical Parameters

Operating Frequency	865-868 MHz(EU)/902-928 MHz(US)
Communication Protocol	ISO/IEC 18000-6C, EPC Global Gen2v2
Applicable Surface	Metal Surfaces
Read Range	Fixed Reader: 45 cm, On Metal(US); 40 cm, On Metal(EU) Handheld Reader: 25 cm, On Metal(US); 40 cm, On Metal(EU)

2.3 Chip Characteristics

Chip Manufacturer	NXP®
Chip Type	NXP® UCODE® 8
EPC Memory	Up to 128 bits
TID Memory	96 bits
User Memory	0 bits
Read Sensitivity	-23 dBm
Write Sensitivity	-18 dBm
Write Endurance	100,000 times
Data Retention	20 years
Tag Performance Optimization	Support
(Perma)LOCK	Support
Kill Command	Support
Autocorrect Memory Protection	Support
EAS Tag Alternative Function	Support
Authenticity Certification	Support

2.4 Additional Information

Storage Environment	+18°C~+28°C, 40%~60% RH
Operating Environment	-40°C~+100°C

3. Dimensions

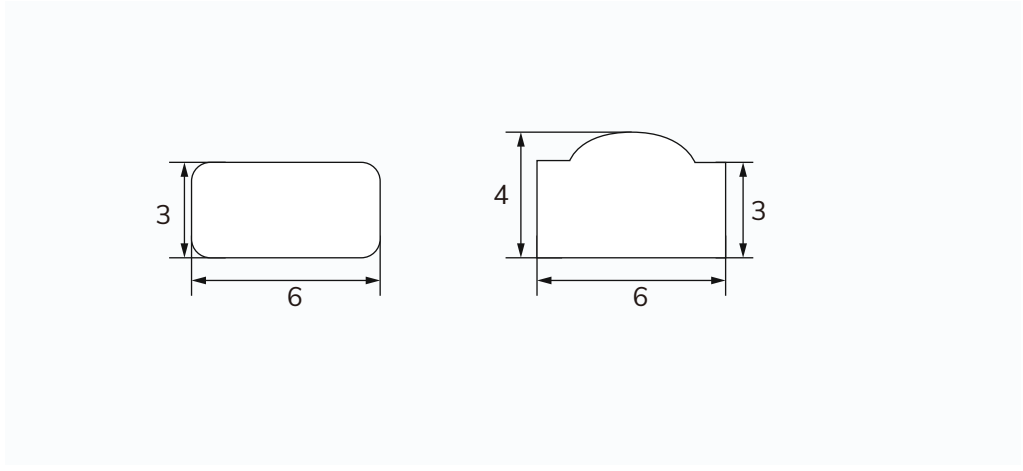

4. Testing Graphs

4.1 Reading Range Under Different Frequency(US)

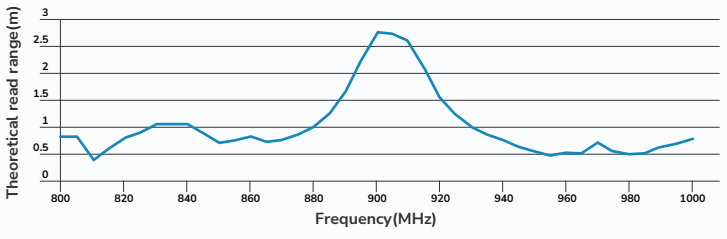

4.2 Tag Power Under Different Frequency(US)

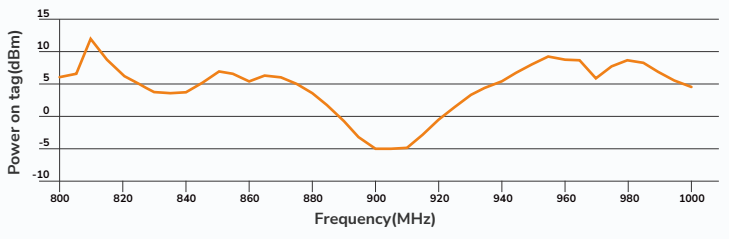

4.3 Reading Range Under Different Frequency(EU)

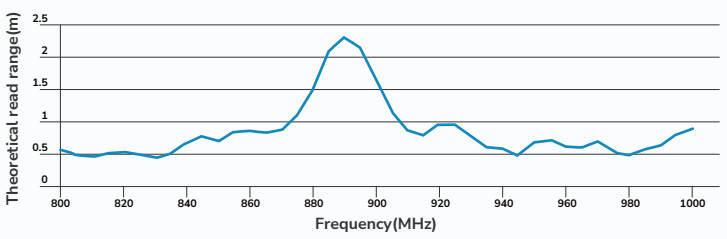

4.4 Tag Power Under Different Frequency(EU)

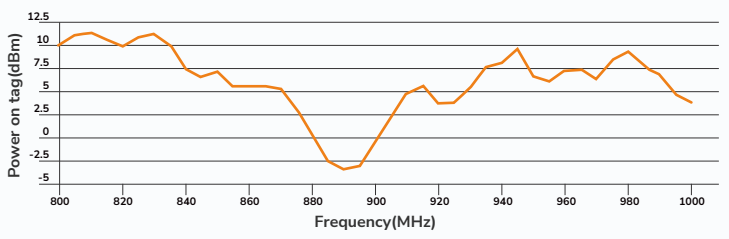

https://rfidtag.com

sales@rfidtag.com

Singapore Office: 51 Goldhill Plaza #07-07 Singapore 308900

Shenzhen Office: 33-408, Qianhai SZ-HK Fund Town, Nanshan, Shenzhen, China 518052

Shenzhen Factory: Q5, XingDao Industrial Park, LongGang, Bantian, Shenzhen, China 518129